LEGACY ROUND FIRE VASE

30 · 24 IN · GFRC CONCRETE FIRE BOWL · 2 SIZES

Specification sheet

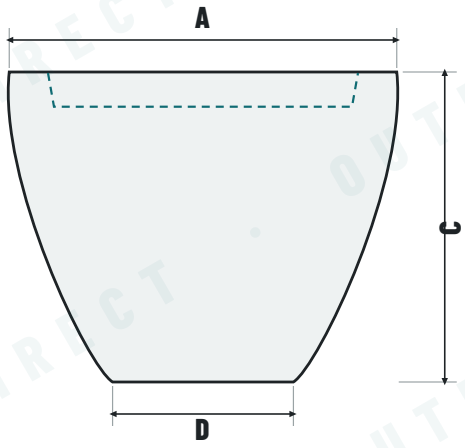

FRONT VIEW

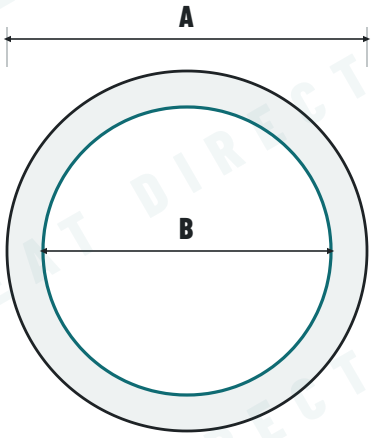

TOP VIEW

MODEL	A · OUTER	B · OPENING	C · HEIGHT	D · BASE	BURNER PAN	BURNER	BTU	WEIGHT
APLRFV30	30″	24″	24″	14″	23-1/2″	12″ fire ring	85,000	145 lbs
APLRTFV24	24″	19″	36″	13-1/2″	18-1/2″	6″ fire ring	43,000	196 lbs

SPECIFICATIONS

MATERIAL	GFRC concrete, hand-cast in the USA by ArchPot for Fire by Design
FUEL	Natural gas or propane
IGNITION	Match lit (key valve) or electronic (AWEIS 24V)
FIRE MEDIA	Not included. Lava rock or fire glass sold separately
LEAD TIME	Built to order. Ships in about 6 to 8 weeks

FINISHES · 22 ARCHPOT CONCRETE FINISHES

MORNING FOG · RAIN CLOUD · EVENING STORM · EUREKA · ROCKSLIDE · CRYSTAL COVE · CORONADO · BLACK

WHITE · DARK WALNUT · URBAN SLATE · ENGLISH LEAD · COBALT BLUE · BEECHWOOD · KHAKI · SEQUOIA

DEEP AMBER · BURNT TERRA COTTA · TERRA COTTA · TUSCAN WASH · NATURAL STONE · LIMESTONE

INCLUDED

- Concrete vessel in the color you pick
- Stainless steel burner and burner pan (sizes in the table)
- Gas inlet with NG orifice or LP air mixer
- Match lit: key valve and flex gas lines
- Electronic: AWEIS ignition, 24V transformer, flex line

NOTES

- All dimensions in inches, nominal. Hand-cast concrete varies slightly piece to piece.
- Drawings show shape only and are not to scale. Use the table for sizes.
- Confirm critical dimensions with us before you build a base, cut an opening or run gas.
- Installation by a licensed gas technician, following local codes.

© 2026 Outdoor Heat Direct · Original document · Doc ID OHD-FBD-APLRFV30-2611 · Unauthorized copying or reproduction prohibited · © 2026 Outdoor Heat Direct · Original document · Doc ID OHD-FBD-APLRFV30-2611 · Unauthorized copying or reproduction prohibited · © 2026 Outdoor Heat Direct · Original document · Doc ID OHD-FBD-APLRFV