WOK ROUND SUBMERSIBLE FIRE ON WATER BOWL

38-3/4 IN · GFRC CONCRETE FIRE ON WATER BOWL · 1 SIZE

Specification sheet

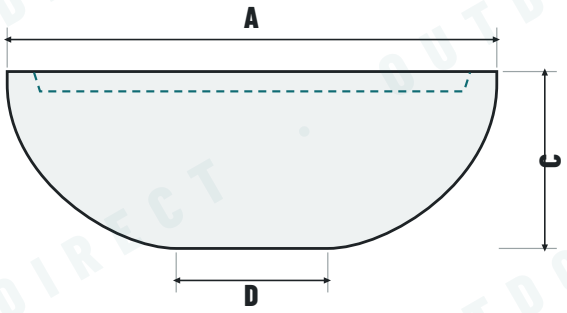

FRONT VIEW

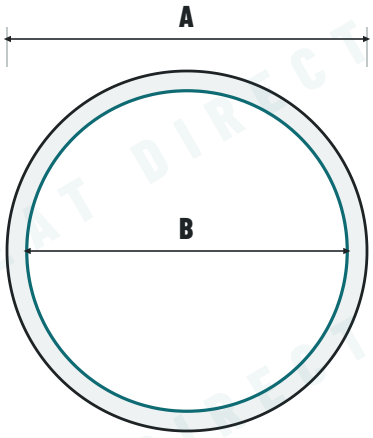

TOP VIEW

MODEL	A · OUTER	B · OPENING	C · HEIGHT	D · BASE	WATER LINE	BURNER	BTU	WEIGHT
WRSFWB39	38-3/4"	34-1/2"	14"	12"	12-3/4"	12" water burner	91,000	225 lbs

SPECIFICATIONS

MATERIAL	Glass fiber reinforced concrete (GFRC), made by Fire by Design
FUEL	Natural gas or propane
IGNITION	Electronic only: SUBEIS 24V fire-on-water system
WATER	Submersible water burner and scupper spillway. Keep water at the water line shown
FIRE MEDIA	Not included. Lava rock or fire glass sold separately
LEAD TIME	Built to order. Ships in about 6 to 8 weeks

FINISHES · 11 CONCRETE BOWL COLORS

LAND GREY · NATURAL GREY · DEEP NATURAL GREY · DOVE WHITE · GREIGE · SAND

CHOCOLATE · WALNUT · PENNY · OBSIDIAN · CHARCOAL

INCLUDED

- Concrete vessel in the color you pick
- Stainless steel burner and burner pan (sizes in the table)
- SUBEIS ignition, fire-on-water pilot assembly, 24V transformer
- Water scupper spillway

NOTES

- All dimensions in inches, nominal. Hand-cast concrete varies slightly piece to piece.
- Drawings show shape only and are not to scale. Use the table for sizes.
- Confirm critical dimensions with us before you build a base, cut an opening or run gas.
- Installation by a licensed gas technician, following local codes.

© 2026 Outdoor Heat Direct · Original document · Doc ID OHD-FBD-WRSFWB39-2611 · Unauthorized copying or reproduction prohibited · © 2026 Outdoor Heat Direct · Original document · Doc ID OHD-FBD-WRSFWB39-2611 · Unauthorized copying or reproduction prohibited · © 2026 Outdoor Heat Direct · Original document · Doc ID OHD-FBD-WRSF